TIRE-SOIL INTERACTION

Deepak Suhag (ME10B011)
Divyanshu Shukla (ME10B012)
Bhushan Khekade (ME10B018)
Sammed Pandharkar (ME10b028)
Shantanu Singh (ME10B034)
Sunil Kumar (ME10B036)

OVERVIEW

- Tire-soil interaction is important for the performance of off-road vehicles and the soil compaction in the agricultural field.
- With an analytical model, which is integrated in multibody-simulation software, the forces and moments generated on the tire-soil contact patch were studied to analyze the tire performance.

OBJECTIVE

- Simulations for different tire maneuvers such as pure longitudinal and lateral slipping are performed at different wheel loads and inflation pressures to study their influence on the tire handling performance and the soil compaction.
- To achieve these objectives, the analytical method utilizing the principles of terramechanics are applied to develop the models of the deformable tire – soil interaction.

3D Car Model

- Model car – Audi R8 Coupe
- Technical Details-
  - Width - 1904 mm
  - Height - 1249 mm
  - Length - 4431 mm
  - Wheelbase – 2650 mm

3D Model of Audi R8 Coupe

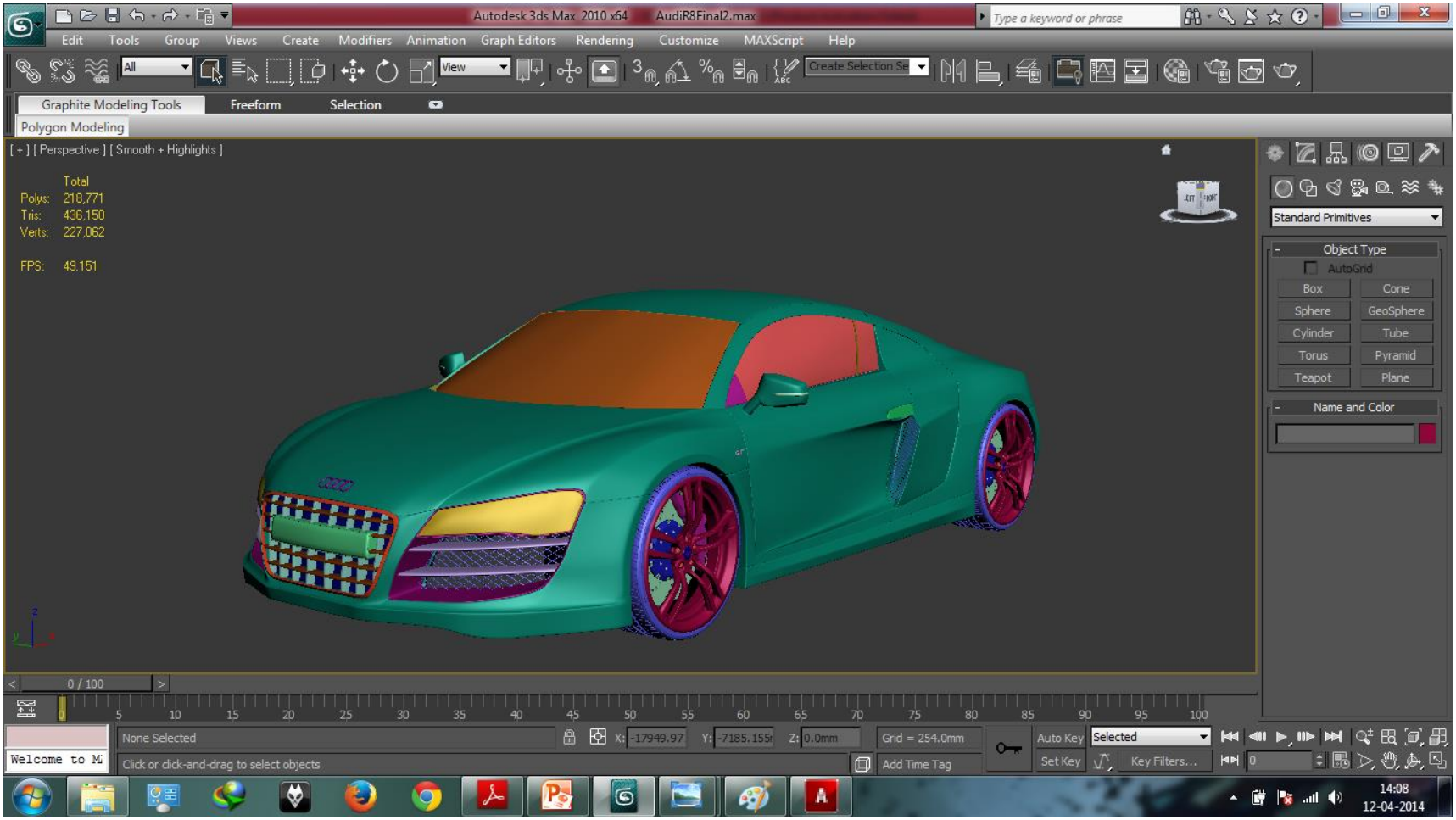

Final Renders of the 3D model

Fiala Tire model

- The Fiala tire model approximates a parabolic normal pressure distribution on the contact patch with a rectangular shape.
- The instantaneous value of the tire-road friction coefficient is determined by a linear interpolation in terms of the resultant slip and the static friction coefficient. The influence of a camber angle on lateral force and aligning moment is not considered.

HSRI Tire models

- The models represent the tire tread as an array of elastic rectangular blocks radially attached to an elastic or rigid ring, as displayed in Fig.

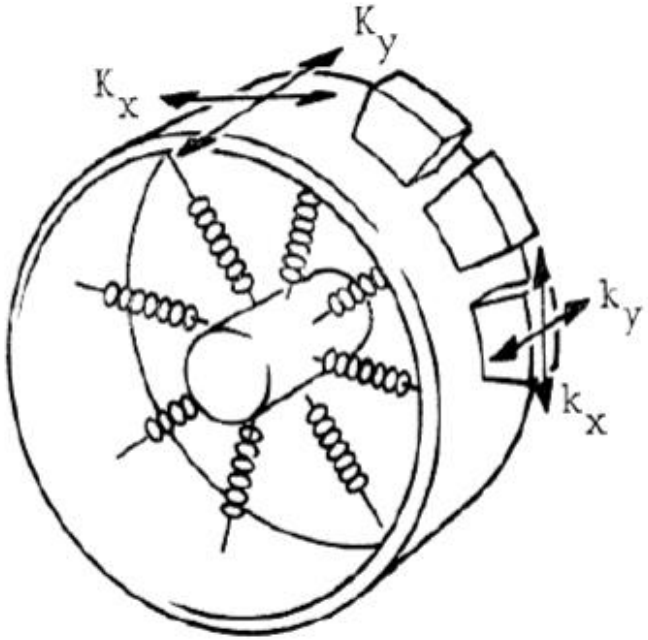

3 types of HSRI Tire Models

- The first version of the HSRI tire model assumes a rectangular contact patch comprised of adhesion and sliding regions. The friction coefficient is assumed to be a linearly decreasing function of sliding speed .
- The second version introduces a transition region between the adhesion and sliding regions.
- The third version proposes a parabolic normal pressure distribution. The generation of forces and moments under pure and combined slip conditions can be obtained.

Brush Tire Model

- The brush model presents the tire tread patterns by elastic brush elements attached to a belt. The belt which has an infinite lateral stiffness is connected to the rim.
- When the tire is in the free rolling status, the tread elements from the leading edge to the trailing edge remain vertical to the road surface, and no longitudinal or lateral force is generated. When a lateral slip occurs, the tire deflections in the lateral direction are developed and corresponding forces and moments appear.

Brush Tire Model

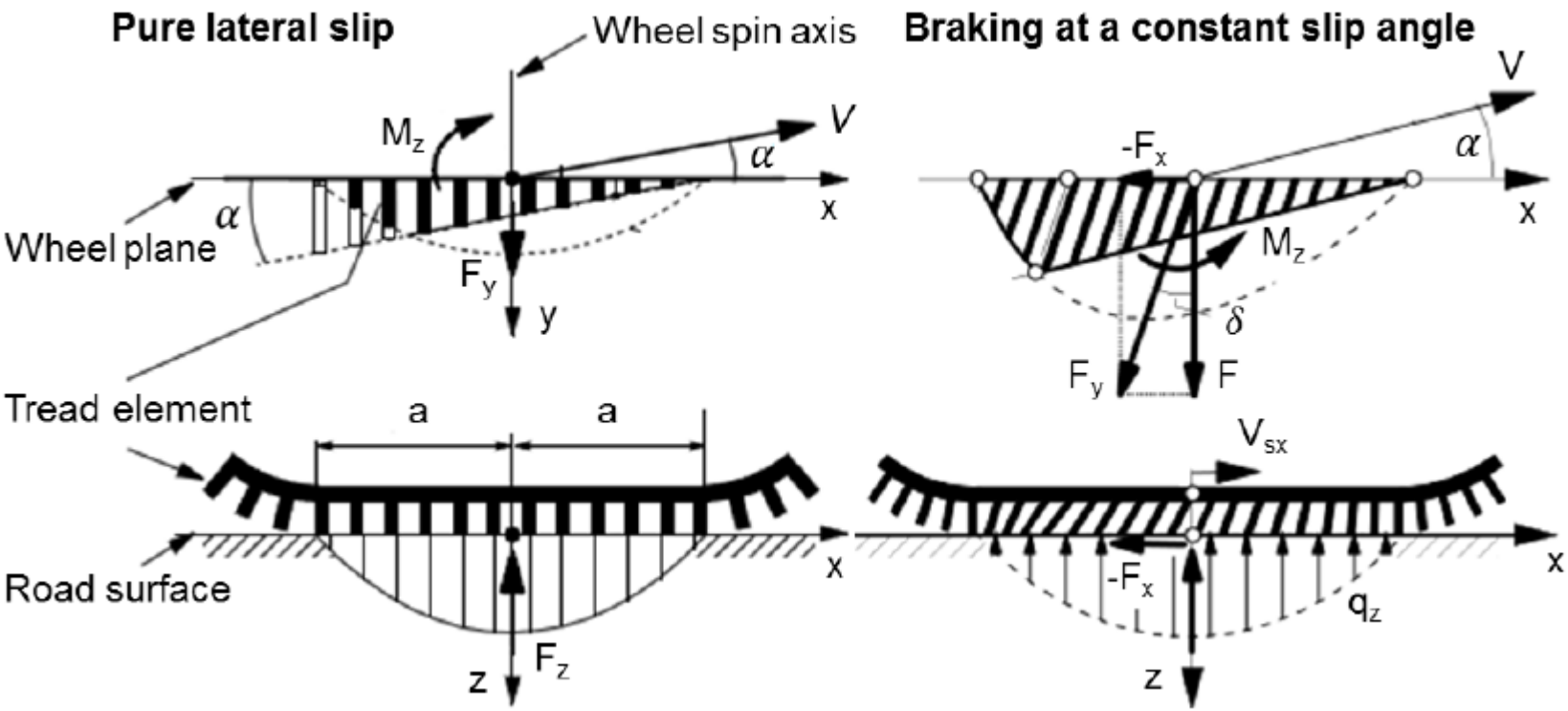

Rigid Tire – Soil Interaction

- Pneumatic tire assumed to be rigid when dealing with soft soil
- The original rigid tire – soil interaction model established by M. G Bekker in 1956.
- Based on the assumption that the soil reaction is radial and no shear stress exists in the contact patch. The radial stress equals to the normal pressure under the sinkage plate at the same depth in the pressure-sinkage test.

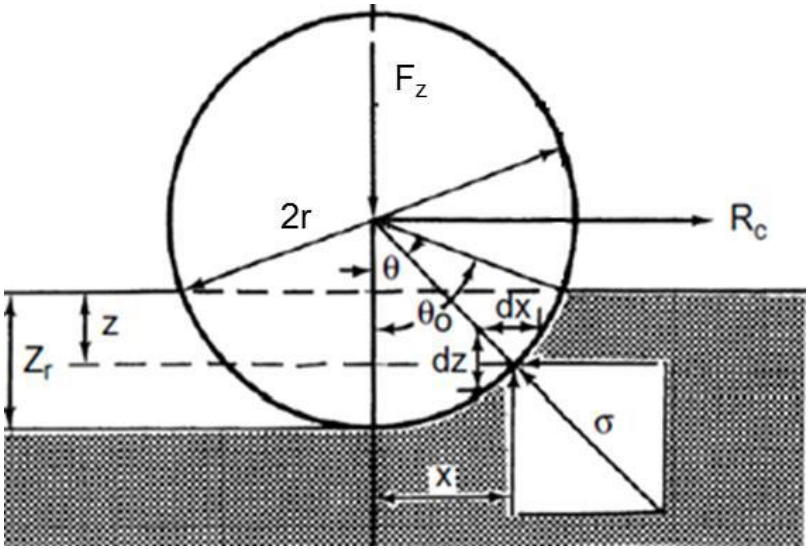

- Since the forces applied on the rigid tires are in the equilibrium status, the following equations were proposed for the description of compacting resistance and vertical load.

$$R_c = b_t\left(\frac{k_c}{b_t} + k_\phi\right)\frac{z_r^{n+1}}{n+1}$$

$$F_z = \frac{b_t\left(k_c / b_t + k_\phi\right)\sqrt{2z_r r}}{3} z_r^n (3-n)$$

Where

R_c	motion resistance	z_r	maximum soil sinkage
F_z	vertical force	r	tire radius
b_t	tire width	n	sinkage exponent
k_ϕ	pressure-sinkage parameter in the Bekker equation		
k_c	pressure-sinkage parameter in the Bekker equation		

- This implies that the motion resistance Rc of a rigid tire is equal to the vertical work per length in compressing the sinkage plate to a depth of Zr. Therefore the motion resistance is usually considered as the compacting resistance.
- Acceptable if sinkage is moderate.

Anti-aligning torque in Rigid tire – soil interaction

- K. Yoshida established Lunar tire model based on Rigid tire – soil interaction in 2003
- Yoshida demonstrated that unlike deformable tire, showing self aligning torque, rigid tire – soil shows a characteristic called 'Anti-aligning torque'.

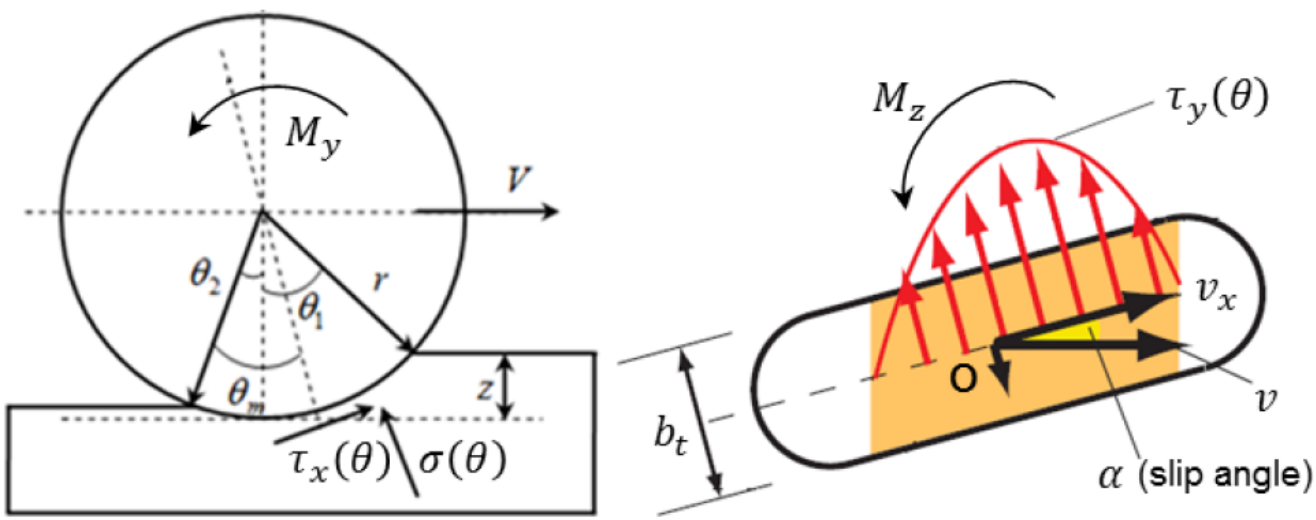

Radial stress Distribution on contact area

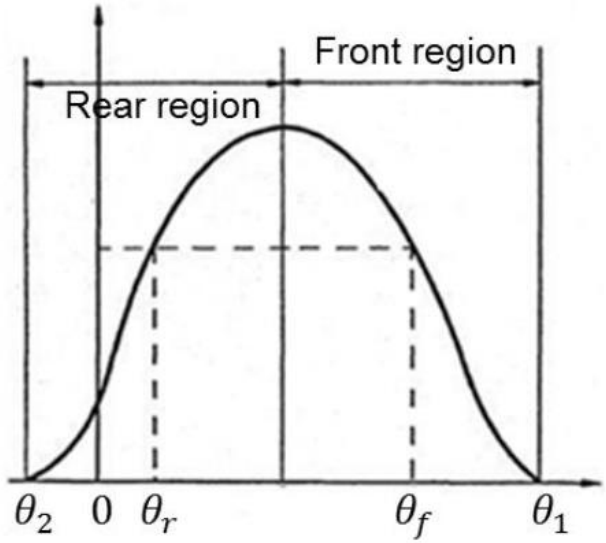

- The radial stress distribution within the contact area was divided into the front and rear area according to *Θm* where the maximum radial stress occurs.
- the maximum radial stress could be described by the following equation:

$$\Theta_m = \Theta_0(c_1+c_2 i)$$

- the angular position of the maximum radial stress was determined by

$$\frac{\theta_r-\theta_2}{\theta_m-\theta_2}=\frac{\theta_1-\theta_f}{\theta_1-\theta_m}\Rightarrow\theta_f=\theta_1-(\theta_1-\theta_m)\frac{\theta_r-\theta_2}{\theta_m-\theta_2}$$

Where

θ_1 entry angle θ_2 exit angle

θ_r, θ_f location where radial stresses are identical in the rear and front regions

Equations

$$\sigma(\theta)=\begin{cases}\left(\dfrac{k_c}{b_t}+k_\phi\right)\left(r(\cos\theta-\cos\theta_1)\right)^n & (\theta_m<\theta\le\theta_1)\\ \left(\dfrac{k_c}{b_t}+k_\phi\right)\left\{r\left(\cos\left(\theta_1-(\theta_1-\theta_m)\left(\dfrac{\theta-\theta_2}{\theta_m-\theta_2}\right)\right)-\cos\theta_1\right)\right\}^n & (\theta_2\le\theta\le\theta_m)\end{cases}$$

$$\theta_1=\cos^{-1}\left(1-\frac{z}{r}\right)$$

$$\theta_2=\cos^{-1}\left(1-\frac{k_r z}{r}\right)$$

Where

z	soil sinkage	k_r	Tire sinkage ratio
r	tire radius	σ	radial stress

Janosi and Hanamoto, Yoshida and Ishigami Equations

J(Θ) refers to shear deformation

$$j_x(\theta) = \int_{\theta}^{\theta_1} r[1-(1-i)\cos\theta]d\theta = r[(\theta_1-\theta)-(1-i)(\sin\theta_1-\sin\theta)]$$

$$j_y(\theta) = \int_{\theta}^{\theta_1} r(1-i)\tan\alpha d\theta = r(1-i)(\theta_1-\theta)\tan\alpha$$

$$\tau_x(\theta) = [c+\sigma(\theta)\tan\phi]\left(1-e^{-j_x(\theta)/K_x}\right)$$

$$\tau_y(\theta) = [c+\sigma(\theta)\tan\phi]\left(1-e^{-j_y(\theta)/K_y}\right)$$

Where

i	longitudinal slip ratio	α	slip angle
K_x, K_y	longitudinal and lateral shear deformation modulus		
τ_x, τ_y	longitudinal and lateral shear stresses		

The drawbar pull F_x and the vertical force F_z were obtained by integrating the component of the radial and shear stress in the longitudinal direction (x axis) or the vertical direction (z axis) respectively from the entry angle to the exit angle.

$$F_x = b_t r \int_{\theta_2}^{\theta_1} (\tau_x(\theta)\cos\theta - \sigma(\theta)\sin\theta) d\theta$$

$$F_z = b_t r \int_{\theta_2}^{\theta_1} (\tau_x(\theta)\sin\theta + \sigma(\theta)\cos\theta) d\theta$$

The lateral force F_y and the anti-aligning torque M_z were obtained by integrating the stress in the lateral direction (y axis). The resistance torque M_y was obtained by integrating the longitudinal shear stress.

$$F_y = \int_{\theta_2}^{\theta_1} b_t r \tau_y(\theta) + R_b (r - z(\theta)\cos\theta) d\theta$$

$$M_z = b_t r^2 \int_{\theta_2}^{\theta_1} \tau_y(\theta)\sin\theta d\theta$$

$$M_y = b_t r^2 \int_{\theta_2}^{\theta_1} \tau_x(\theta) d\theta$$

ADAMS SIMULATION

- Using Adams View, models for both wheel and road are made with appropriate parameters provided by editing the property files given with ADAMS.
- Wheel – mdi_fiala01.tir
- Road – 2D_plank_soft_soil.rdf

ADAMS SIMULATION

Tire parameters defined in the tire property file

Unloaded radius r [m]		Vertical stiffness K_t [kN/m]	Width b_t [m]
0.531		1050	0.28
Moment inertial [kg mm^2]		Damping Coefficient D_t [kN s/m]	Weight m_t [kg]
I_x, I_z	I_y		
6.976	12.434	48.6	95

Soil parameters defined in the soil property file

k_c [kpa/m^{n-1}]	k_φ [kpa/m^n]	n [-]	c [kpa]
65.5	1418	0.97	2.2
ϕ [degree]	K_x [mm]	K_y [mm]	c_s [kN s/m]
39.4	61	20	0.28

ADAMS SIMULATION

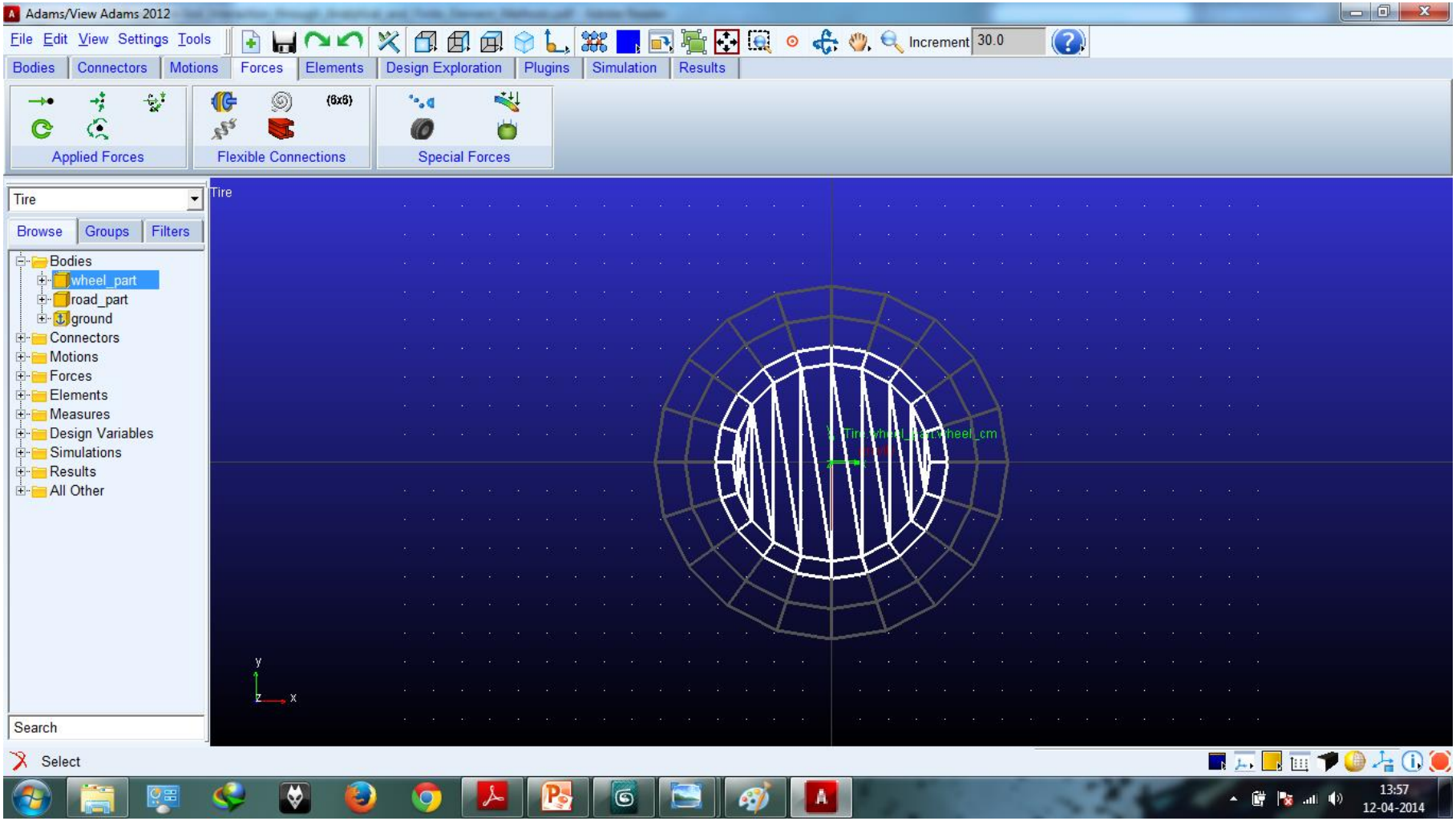

ADAMS SIMULATION

- Once the models have been created, code for determining the interaction between the wheel and road has to be written in FORTRAN which is compiled by ADAMS Solver at every time step to produce the required results.
- For test purposes, the existing tire-road interaction model provided by ADAMS in atire.f is used.
- Due to problems in compiling of atire.f (unresolved linkages), the process cannot be further continued using ADAMS View.

Lateral Force v/s Slip Angle with varying vertical loading

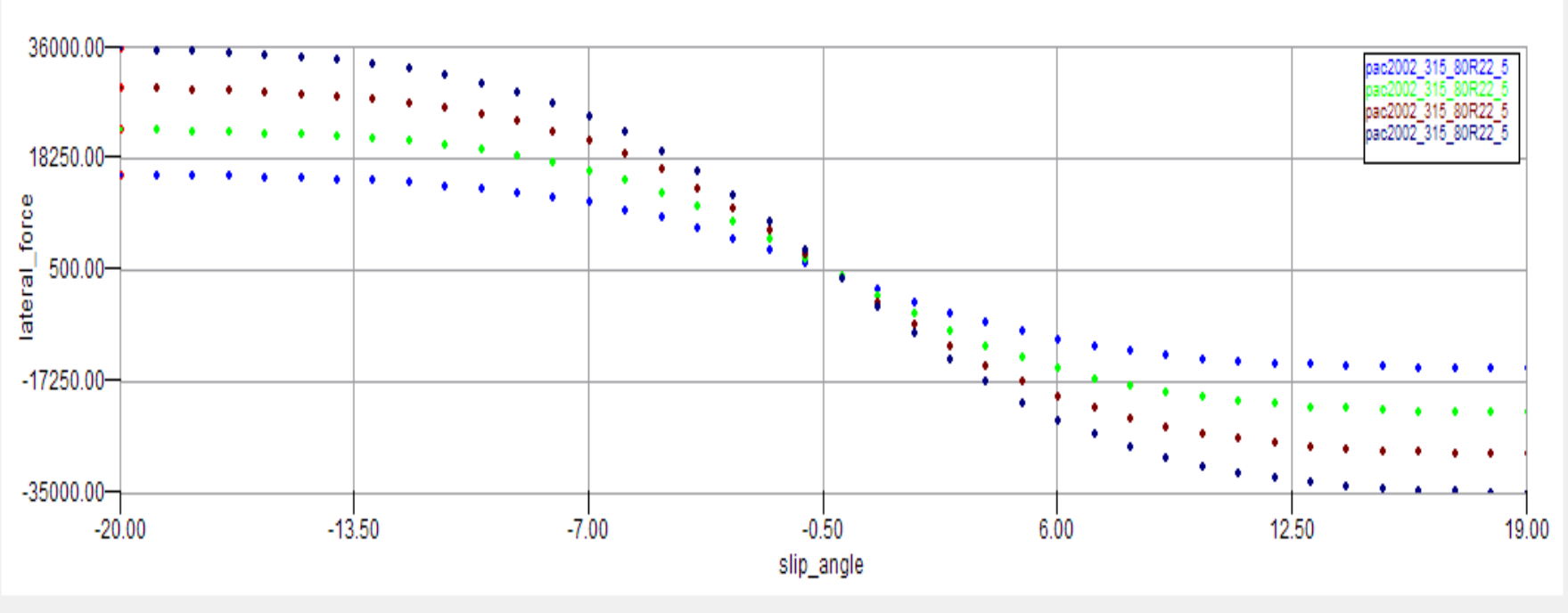

Longitudinal force v/s Longitudinal slip

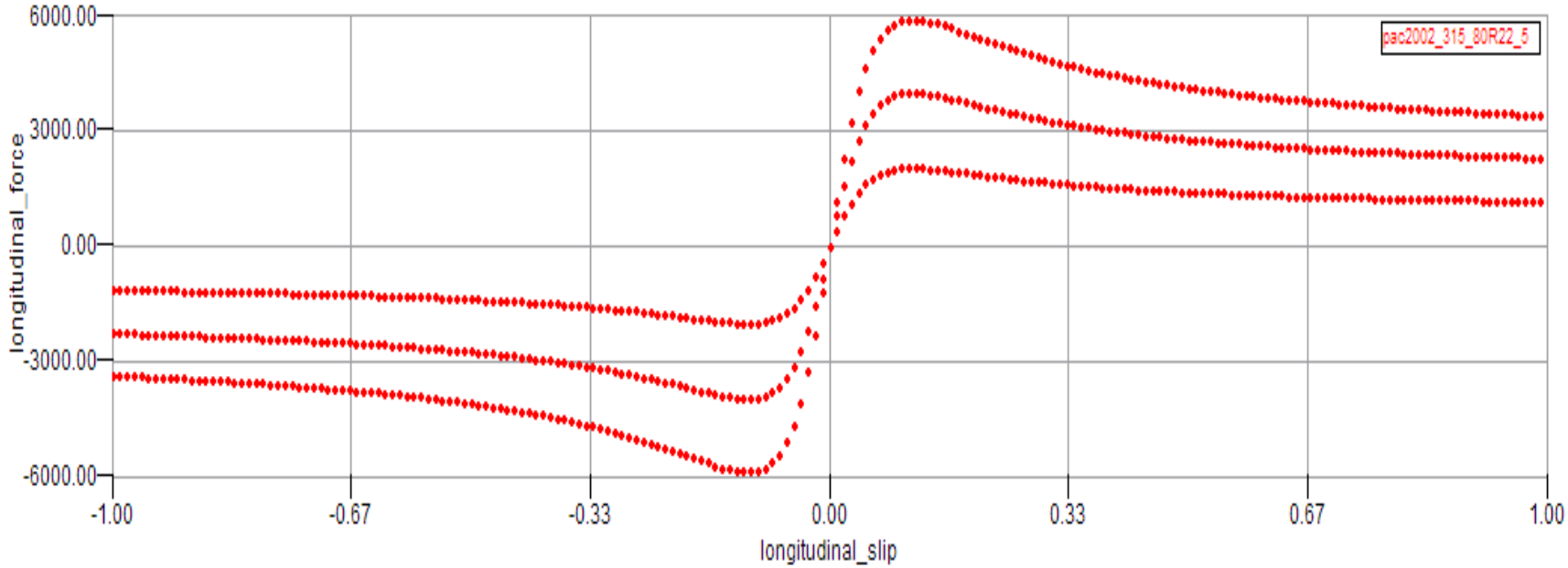

Self aligning torque v/s slip angle with varying vertical load

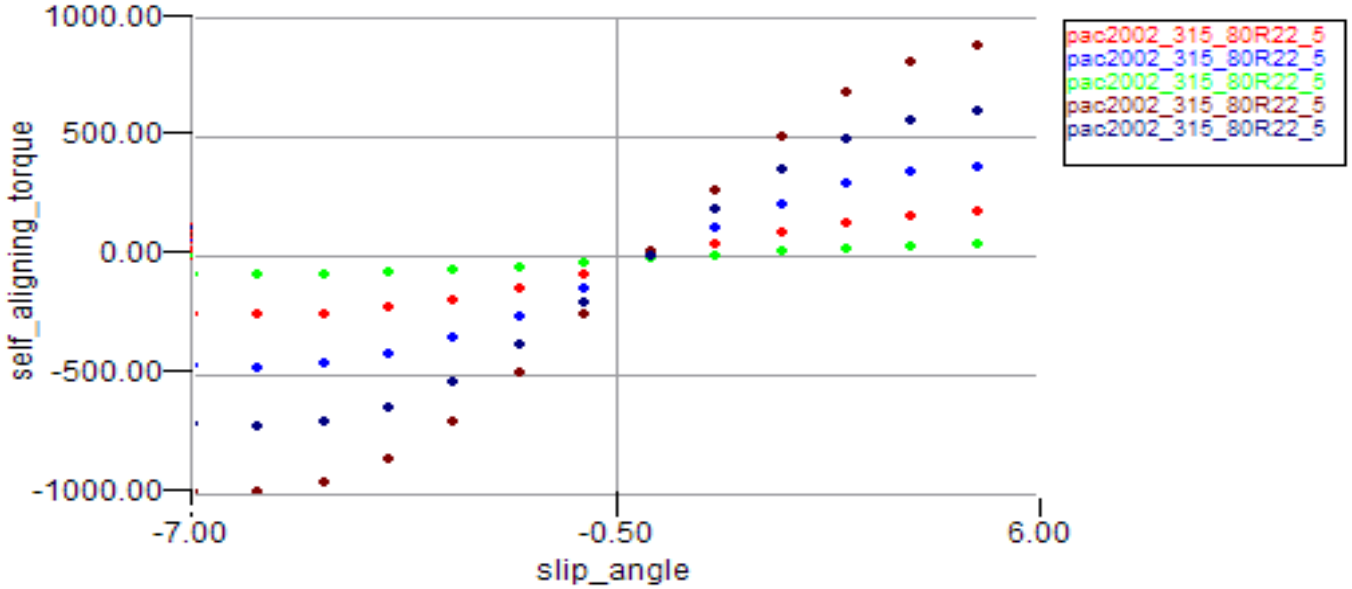

Longitudinal slip = 0, Free rolling

Our Limitations

- In order to predict various parameters regarding the interaction, simulation has to be carried out in MSC ADAMS.
- We have prepared tire model, ground model and the interaction between them is written in FORTRAN.
- FORTRAN code needs to be compiled. Because of problems in linking ADAMS libraries and The Compiler, we’re not able to compile the code yet.

REFERENCES

- Bekker, M. G.: *Theory of land locomotion*. Ann Arbor, Michigan: The University of Michigan Press, 1956.
- Fiala, E.: *Lateral forces on rolling pneumatic tires*. In Zeitschrift V.D.I. 96 (29) (1954), 114.
- Yoshida, K. et. al.: *Terramechanics-based analysis and traction control of a lunar/planetary rover*. In Proceedings of the Int. Conf. on Field and Service Robotics FSR "03, Yamanashi, Japan, 2003.
- Yoshida, K. and Ishigami, G.: *Steering characteristics of a rigid wheel for exploration on loose soil*. In Proceedings of the 2004 IEEE Int. Conf. on Intelligent Robots and Systems IROS "04, Sendai, Japan, 2004.